**"Equipment can't stand in the way of striving for perfection
Equipment should help to achieve it"**

CZARCIE KOPYTO – NEW GENERATION OF DRUM PEDAL
designed and produced in Poland

State-of-the-art equipment, setting new standards where the comfort of play and maintenance, quality and reliability are top priorities

Valued by the best world-class artists who have been using the same pedals for many years without any signs of wear and tear

Passion and 100% commitment is what drives us in our work. That's why we are able to create such exceptional products as Czarcie Kopyto drum pedal.

Top drummers have appreciated the best-in-class quality of our gear which we achieve by adhering to very strict production standards.

- all production is CNC machined in our factory, which gives us full control over the product, repetitiveness of dimensions and highest quality of production
- we use only certified and high-quality types of aluminum and steel
- we don't use casting or any other cheap solutions
- we use bearings in all parts performing rotary motion
- cooperating steel parts, e.g. screws, are heat-treated so there can be no marks or impresses left from tightening screws up
- we are use a threading method, where the thread is formed by a cold forming tap – the cold forming process holds major advantages like: higher pull strenght and better wear resistance
- all aluminum parts are anodized and steel parts are corrosion protected or produced from stainless steel
- all our drum pedals are assembled manually
- all gear is thoroughly quality tested before dispatch to customer

To simplify this text, we are going to use expressions: **double drum pedal – DOUBLE, two single pedals – 2xSINGLE single drum pedal – SINGLE.**

We ask you to thoroughly read this instruction and to follow all the instructions during the usage of equipment. The user can only make adjustments defined here. Not following these instructions, disassembling the equipment or modifying it on your own will result in the loss of warranty.

Technical description and instruction manual

Contents:

Devil's Hoof – new generation of drum pedal

Czarcie Kopyto – model **DOUBLE** (double bass pedal)

Czarcie Kopyto – model **2xSINGLE**
(two sinlges pedals)

Czarcie Kopyto – model **SINGLE**
(single pedal)

1. Drum beaters

In standard-made drum pedal the shaft of the beater is made of aluminum with changeable head made of laminate (4) – Picture 1.1. Special key, added to the set, is for changing the heads – Picture 1.2. The structure of drum beaters enables regulation of the angle of drum beater head inclination in all planes because the body (1) is mounted on ball bearing (2) – locking it on the required position is executed by unscrewing the screw (3) on the rear part of the body (1) – Picture 1.1. Screw on the end contacting with ball bearing has a cavity with the same diameter as bearing – thanks to this, high fastening force can be achieved at relatively low screw clamping force. Both elements – screw and bearing are hardened. It prevents from any wearing of these elements. Drum beater rods are made of extra fine steel and have a standard diameter. So it is possible to use drum beaters from other manufacturers.

.

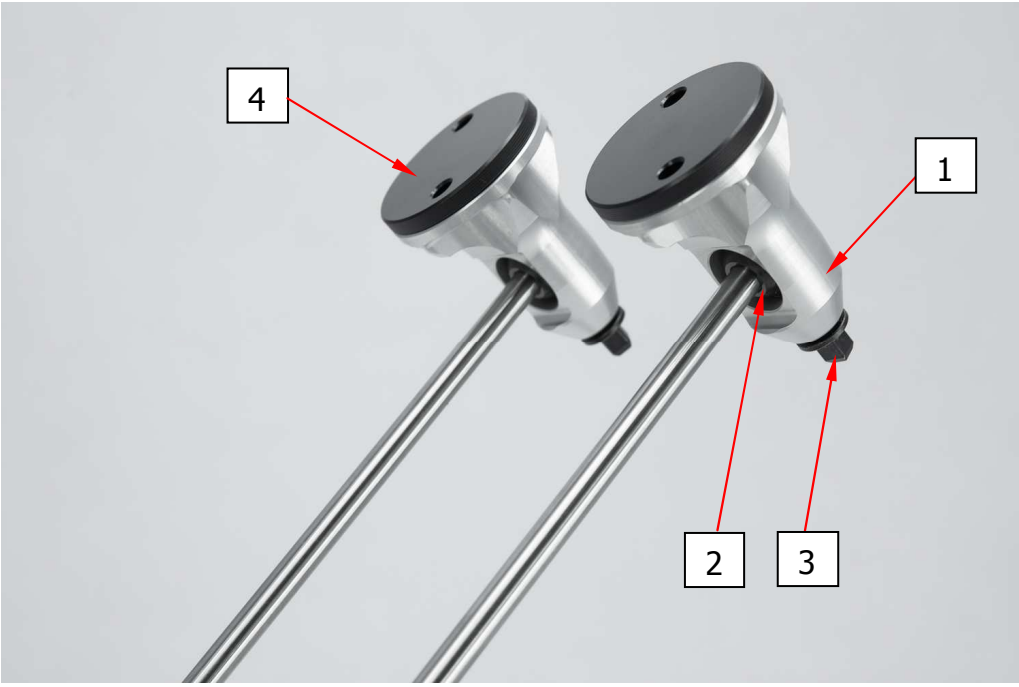

Fot. 1.1 Standard-made drum pedals

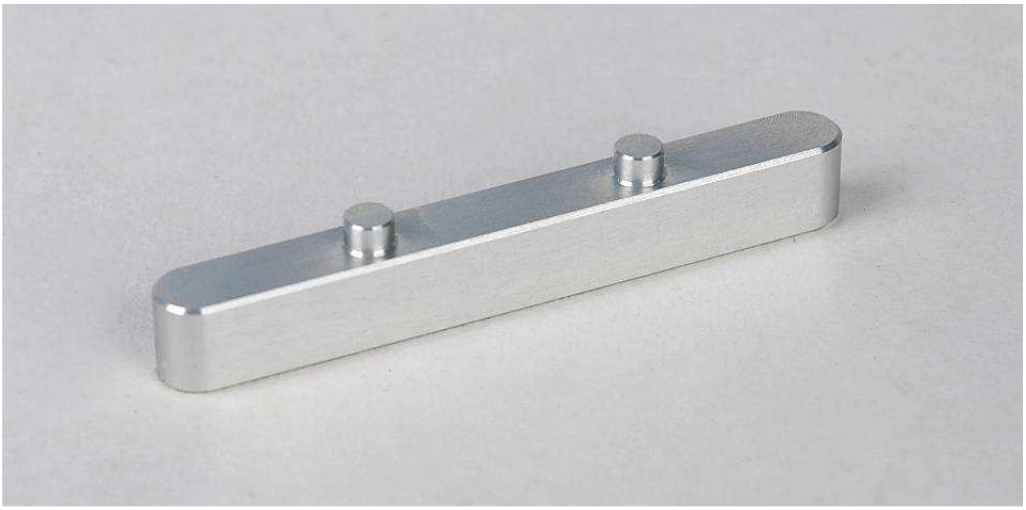

Fot. 1.2 Key for drum beater heads

1.1 Drum beaters bearing

In most constructions on the market, drum beaters are usually mounted on the axes with bearings and supported on one side. This kind of solution triggers generation of bending forces during pressing the pedal by the foot. These forces are the cause of majority of bearings damages. Our solution eliminates the adverse distribution of forces. Every beater holder is equipped with two bearings in a way to apply a load on bearings in the form of only radial forces. It guarantees its long-term and failure-free operation.

Fot.1.1.1 Drum beater bearings in main beater

1.2 Symmetric spacing of beaters against the bass drum axis – DOUBLE

Our construction distinguishes itself with the symmetric spacing of drum beaters against the bass drum axis what has the significant meaning during the bass drum sound amplification. Thanks to that kind of spacing, the sound from both drum beaters is identical. The significant condition is well tuned equipment and good drummer. Position of the whole set against the bass drum as dependent on the configuration of clamping arm (1) and central base (2) Picture 1.2.1. in main pedal. It doesn't matter if its DOUBLE, 2xSINGLE or SINGLE, we always configure it properly. In the situation when we play it alternately – on 2xSINGLE or DOUBLE, and we want our beaters in single pedal to hit exactly the centre of the central and we also want to have a constant symmetric spacing, we would have to configure these elements on our own – description is provided in p. 5.2 Fixing the twin drum pedal – Twin and in p. 5.3 Fixing the single drum pedal – Single.

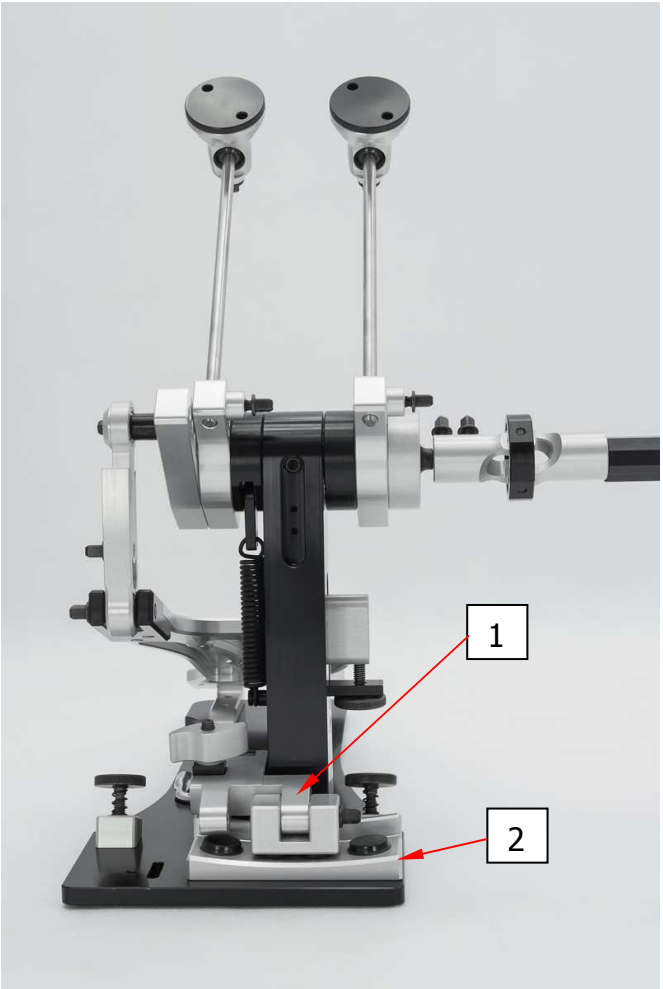

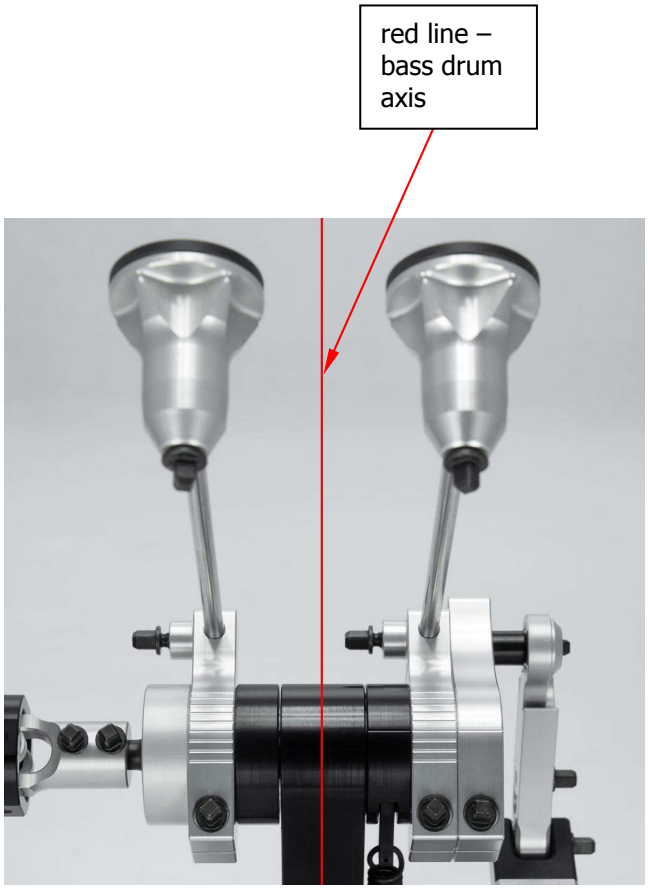

Picture 1.2.1 Symmetric spacing of beaters against the bass drum axis

1.3 Beater's angle of inclination adjustment

The beater holder (1) is fixed on the spring holder (2) equipped with bearings and is equipped with a scale cut out on the circuit thanks to which it can be adjusted with high precision. To do that, you have to loosen the tightening screw (3), set the beater holder at the requested angle and tighten the screw again – Picture 1.3.1. The adjustment is carried out really fast and the number of possible combinations is really big – everyone can find his own suitable settings.

Picture 1.3.1 Beater's angle of inclination adjustment

2. Spring tension system

In most of the drum pedals on the market a spring adjustment causes difficulties, not mentioning about keeping the constant spring tension during a long playing session. Slackening counter-nuts, adjusting screws deflection during springs operation, creaking, etc. We eliminated all of these problems thanks to the unique construction of the tensioner – Picture 2.1. The whole tensioner construction is patented. Spring tensioner was designed in a way to make the springs adjustment an easy task and, above all, to enable verifying the spring tension in particular situation and what is the most important thing – to make a possibility of reverting to the earlier settings after the adjustment, what often takes place during equipment testing. To do that, the tensioner mechanism was quipped with a scale cut out on a stand and tensioner. Al you need to do is to note the positions suitable to us and revert it every time we want and with full guarantee of repeatability.

Picture 2.1 Spring tensioning system

2.1 Spring tension adjustment

To adjust the spring tension all you need to do is to push a tensioner block (1) with your hand – Picture 2.1.1 – the adjusting screw (2) will go down, and you can adjust it from now on. If the block is not forced, no adjustment is possible because the screw is locked with two resisting balls (3) placed under the adjusting screw holder (4). (picture 2.1.1 is pictorial, in reality – the adjusting screw doesn't have to be lowered so much – situation in which the resisting balls are not placed inside the cavities in adjusting screw, will to the job). After the adjustment and when the pressure is released, screw will go up and lock in resisting balls – Picture 2.1.2. which, thanks to the spring tension, will fix the adjusting screw in the required position. There are no counter-screws or any other fixing elements. We guarantee that the spring tension will keep the same level up to the next adjustment.

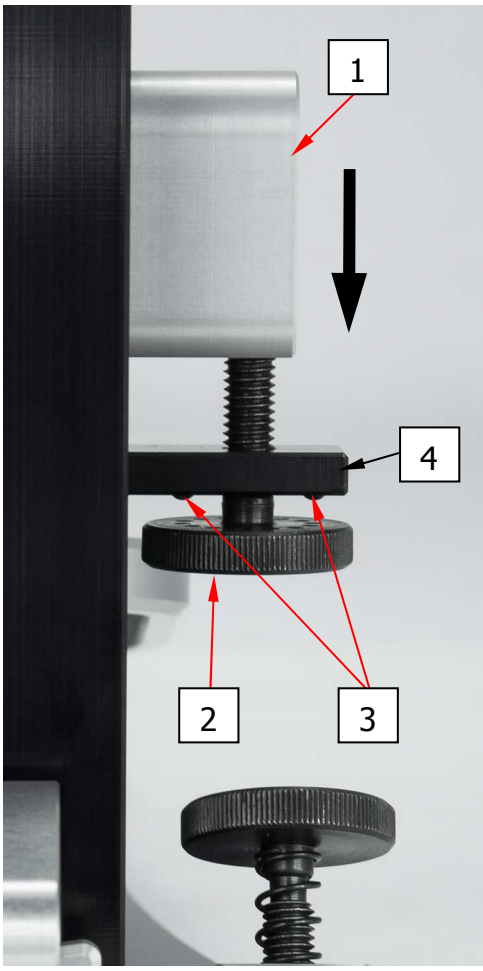

Picture 2.1.1 Spring tension adjustment.
Screw position „ready to adjust"

Picture 2.1.2 Spring tension adjustment
Screw position „after the adjustment"

2.2 Replacement of spring

To replace the spring, you have to follow the instructions below – Picture 2.2.1

- Completely loosen the spring (1) fixed in pedal with the adjusting screw (2)
- using the 1.5mm Allen wrench, unscrew the screw (3) on the spring suspension (4)
- dismount the "old" spring
- suspend the lower hook of the "new" spring on the lower spring slide suspension (5)
- place the upper hook inside the upper suspension notch (4)
- screw in the screw again (3)

tension the spring according to p. 2.1 Spring tension adjustment

-

Picture 2.2.1 Replacement of spring

3. Footboard

Footboard (1) is made of high-quality aluminum and is equipped with an ending (2) used to join the pedal with the yoke (3). There are four ball bearings – two pieces for each bearing mounting (4), which is screwed to the base (5) – Picture 3.1. This construction is very resistant to pressure and bending of the pedal from one side to another, what prevents from clearances so often occurring in majority of constructions on the market. Picture below shows a standard engraving – on Client's request we make non-standard designs. To order this, please contact us on our e-mail address.

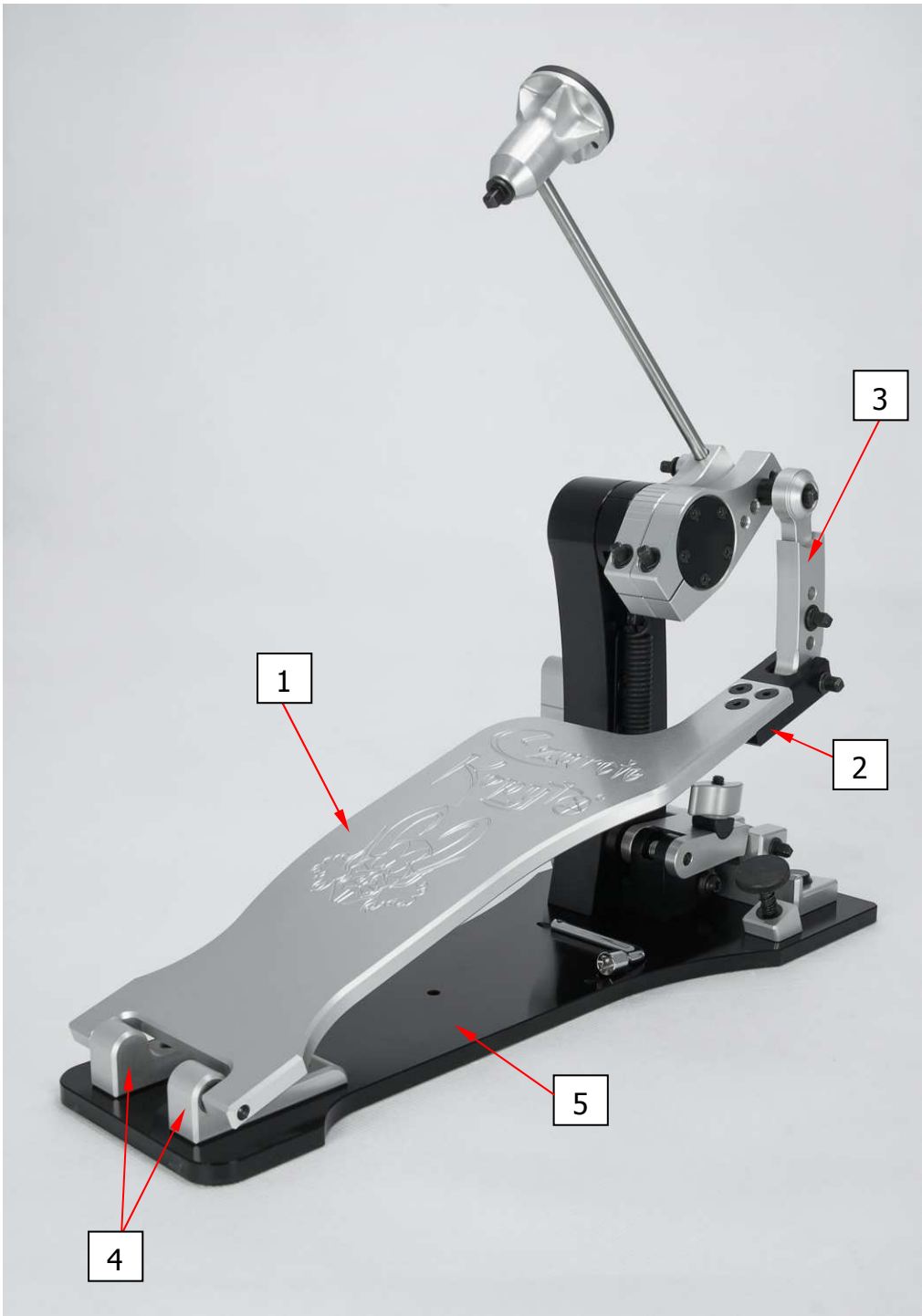

Picture 3.1. Footboardl with standard engraving

3.1 Yoke – direct drive

Yoke (1) – Picture 3.1.1 is equipped with two movable elements joined with each other by only one screw (2). Thanks to three holes it is possible to change its length up to 22mm. This kind of adjustment enables to easily lower the pedal without any necessity of changing any other settings. Both ends of the yoke are equipped with bearings.

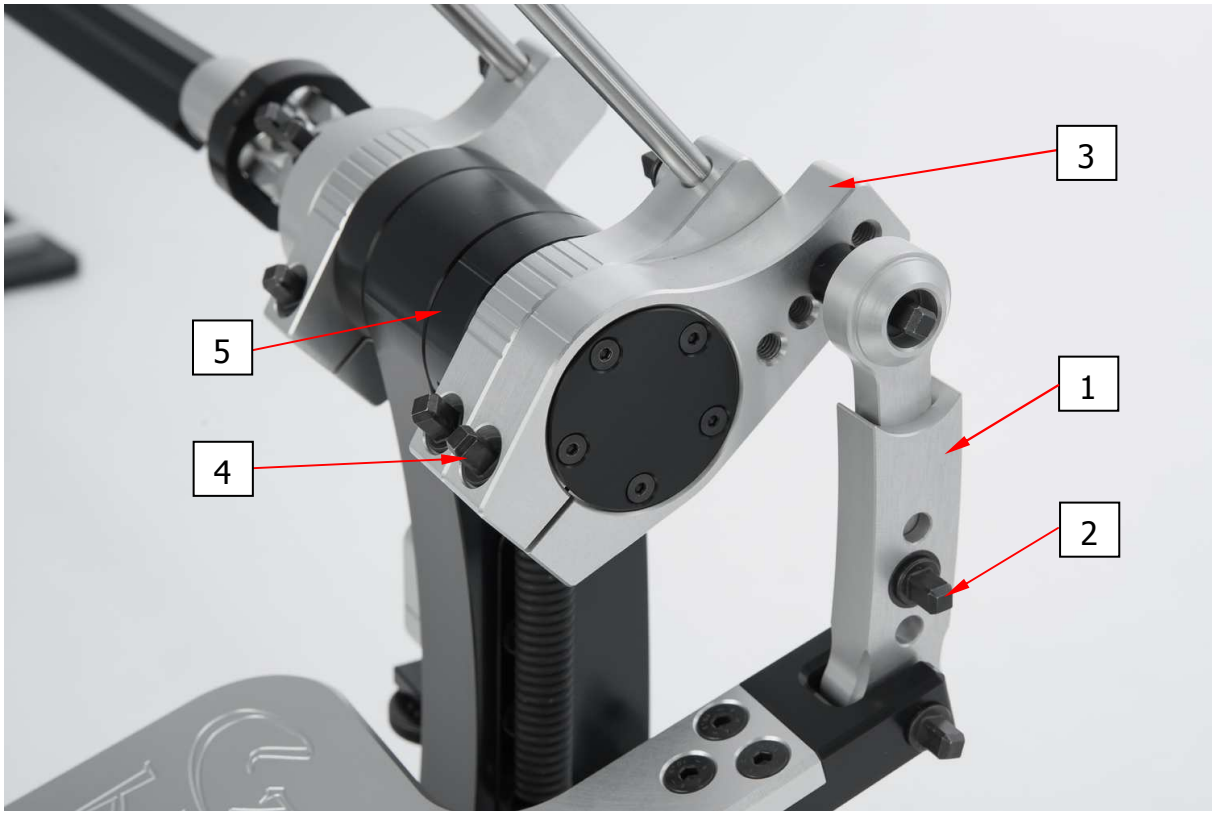

Picture 3.1.1 Yoke with length adjustment with 3-grade transmission

3.2 Pedal's height adjustment

Pedal's height is changed by changing the active yoke length (1) Picture 3.1.1. To do this, you have to unscrew the screw (2) which locks the yoke. Next, put it into the other hole and screw it in again to achieve the suitable pedal's height. If the height doesn't suit you, it can be re-adjusted by adjusting the yoke holder (3). To do this, you have to loosen the screw (4), shift the yoke on spring holder (5) and tighten the screw (4). You have to remember that in the first method of adjustment, we don't affect the operational characteristic of a drum pedal, but in the second method, we also change the arm length of the force arising from the feet pressure transmitted to pedal – in other words, the bumper striking force is changed.

3.3 Change of pedal action

In our drum pedals, we used the 4-grade transmission adjustment of the beater movement against the pedal movement. Thanks to screwing down the screw (1) – Position 3.3.1 into one of the four holes in yoke holder (2). A position closest to the yoke axis of rotation gives the shorter pedal shift and fastest beat, and the furthest position trigger the longer pedal shift and higher beating force.

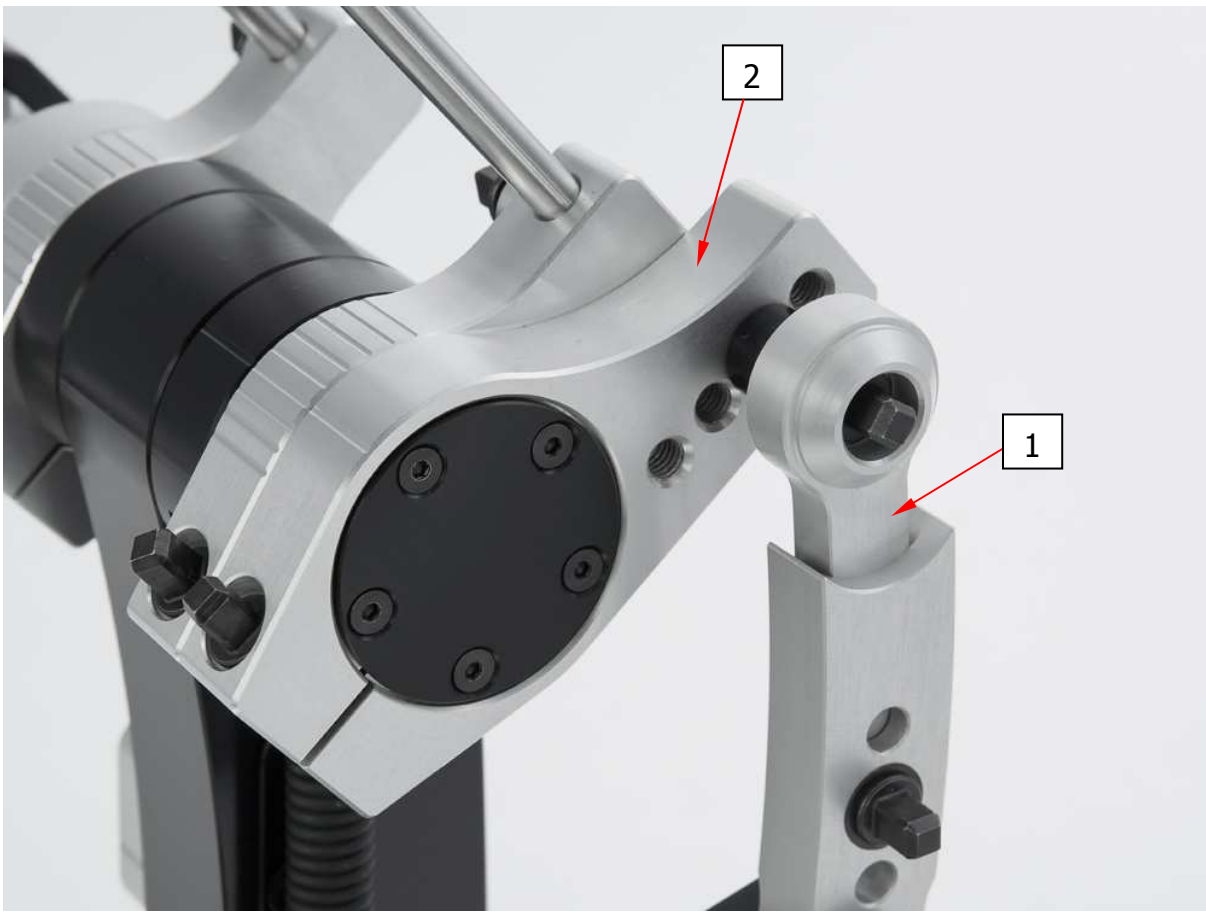

Fot.3.3.1 Change of pedal action

4. Connecting shaft

A shaft connecting the main and auxiliary pedals is equipped with cardan joints win which the torque transmission is carried out by a ring placed outside the knuckle – circumferentially – Picture 4.1. All the elements are made of aluminum and every knuckle is equipped with 2 rolling bearings. This kind of solution enables to transmit forces larger than in hinges with drive-transmitting element placed in the middle of the knuckle, and prevents from any clearances during hinge operation.

Picture 4.1 Connecting shaft

4.1 Length adjustment of the connecting shaft

Both ends of the connecting shaft are ended with cardan joints, which are equipped with set screws (1) – 2 screw per one joint – Picture 4.1.1, used for fixing it to the main and auxiliary pedal.

Picture 4.1.1 Connecting shaft – minimum length

Connecting shaft length is adjusted by unscrewing two set screws (2), adjusting the shaft to a suitable length and tightening the screws. Length can be adjusted up to 190 mm against the minimum length (before unscrewing) – Picture 4.1.2

Attention!!! Care should be taken to set the tightened elements in the correct position against each other in a way that the ends of two set screws (2) are in contact with surfaced made on the connecting rod (3).

Picture 4.1.2 Connecting shaft – length adjustment

4.2 Connecting shaft installation DOUBLE

To install a connecting shaft in double bass drum pedal, position both pedals – main on the right and auxiliary on the left side, preferably in parallel. The distance between them should be close to the required a connecting shaft length. To install the a connecting shaft, insert the pin-stocks (2) and (3) – Picture 4.2.2 and 4.2.3 of both pedals into the knuckle holes and tighten the four set screws (1)

Attention!!! Care should be taken to set the tightened elements in the correct position against each other – Picture 4.2.2 and Picture 4.2.3 in a way that the ends of two set screws (1) are in contact with surfaced made on pin-stocks (2) and (3)– it is vital for correct connecting shaft operation and cooperation between main and auxiliary pedals.

Picture 4.2.1 Connecting shaft installed in DOUBLE

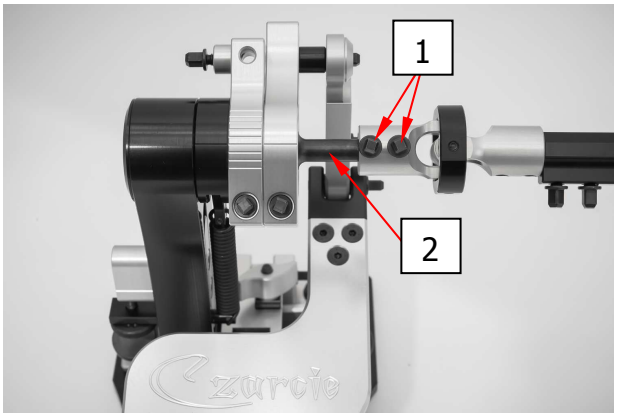

Picture 4.2.2 Hinge on the side of auxiliary pedal

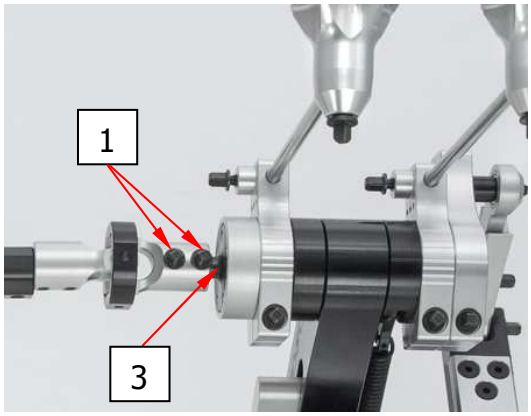

Picture 4.2.3 Hinge on the side of main pedal

4.3 Correct setting of both drum pedals in DOUBLE

The operation of all kinds of cardan joints, also these which are used in drum pedals, is characterized by non-uniform torque transmission.

Correct setting of both pedals in DOUBLE can eliminate this inequality. Necessary condition for correct joint operation is:

a) setting the knuckles on both ends of the intermediate shaft in one plane which can be obtained thanks to the correct rotation of the intermediate shaft, p. 4.1 and p. 4.2

b) Keeping the equality of A angles on the connecting shart joints – Picture 4.3.1. After the joint installation (p. 4.2), both pedals should be positioned in parallel and the right beater is placed in required position. Next, the left beater should be positioned at the same angle and both pedals are installed in a way to obtain the position of both pedals against each other, in which the left beater is inclined at the same angle as the right one (if pedals are positioned not in parallel or at the wrong angle, A angles on joints will not be equal and left beater would deflect).

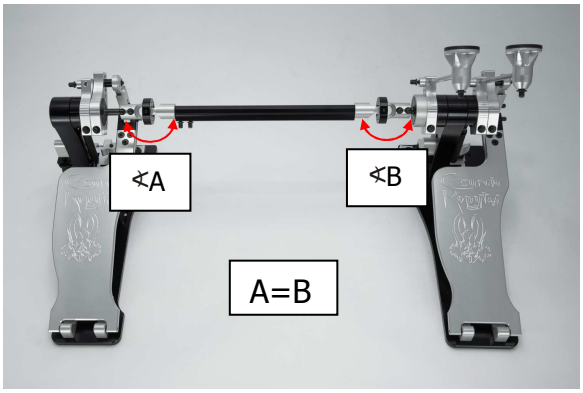

Pic. 4.3.1 Pedals positioned in parallel – A angles are equal - both beaters are at the same angle

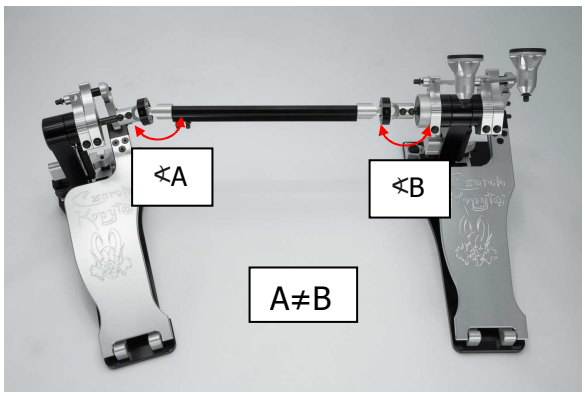

Pic. 4.3.2 Pedals positioned incorrectly – A angles aren't equal – left beater deflects

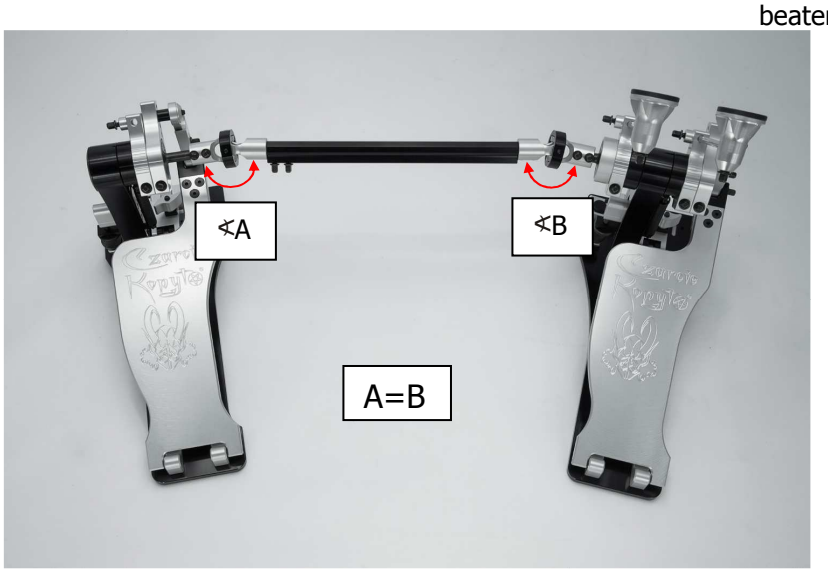

Pic. 4.3.3 Pedals positioned correctly – A angles are equal - both beaters are at the same angle

It should be added that, with small A angles and small errors in main and auxiliary pedal settings, delays are practically imperceptible for the average human being. So, it is not necessary to use it for every drummer. Nevertheless, pedals will operate correctly. But for professional drummers, settings can have important meaning.

5. Fixing the pedal to the bass drum.

Fixing the pedal to the bass drum is carried out by the clamping device placed under the pedal on the right side of the stand – Picture 5.1

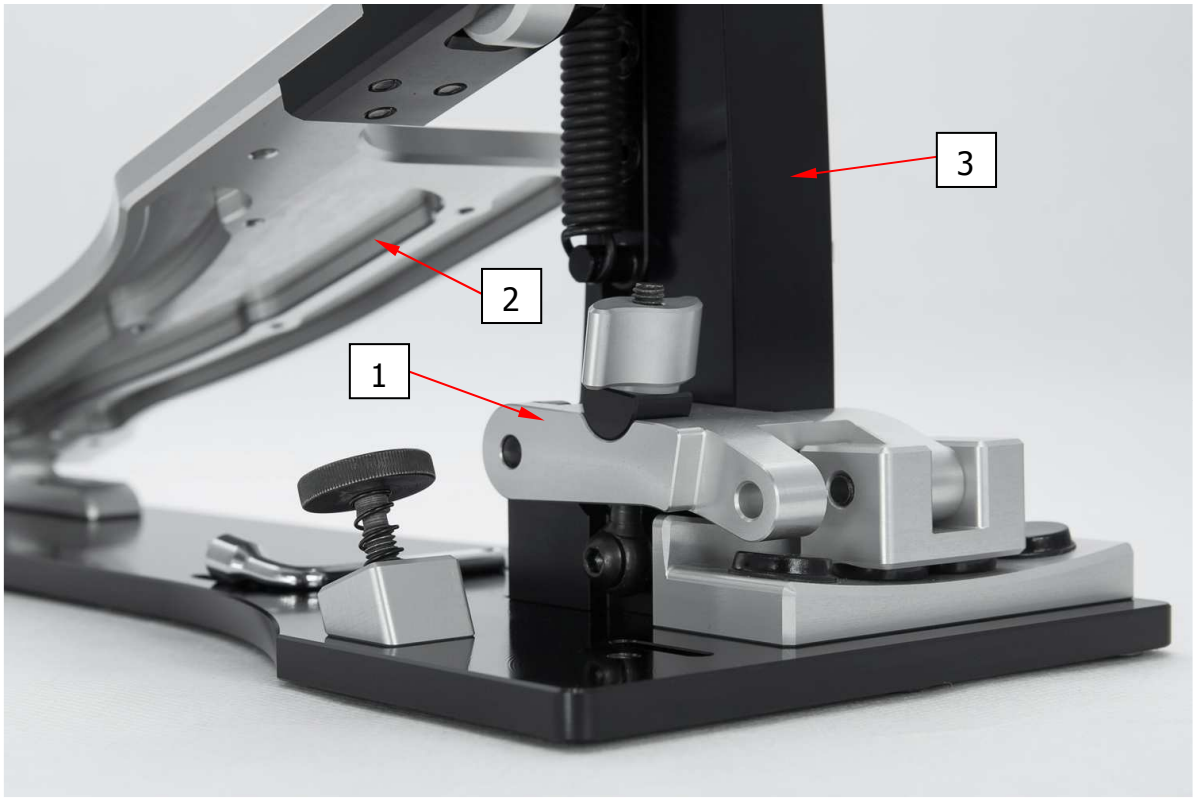

Picture 5.1 Clamping device

5.1 Clamping device

Construction of the clamping device enables the assembly to both thin (made of metal for instance) and very thick hoops – thickness range 1-22mm. Lever (1) – Picture 5.1.1, is equipped with a return spring (2) and ended with a profiled clamping plate (3). By tightening the butterfly nut (4) the hoop is tightened to a profiled central base (5) and pedal is now firmly fined to the hoop. Additionally, the whole set is equipped with spikes with length adjustment which enable better foundation.

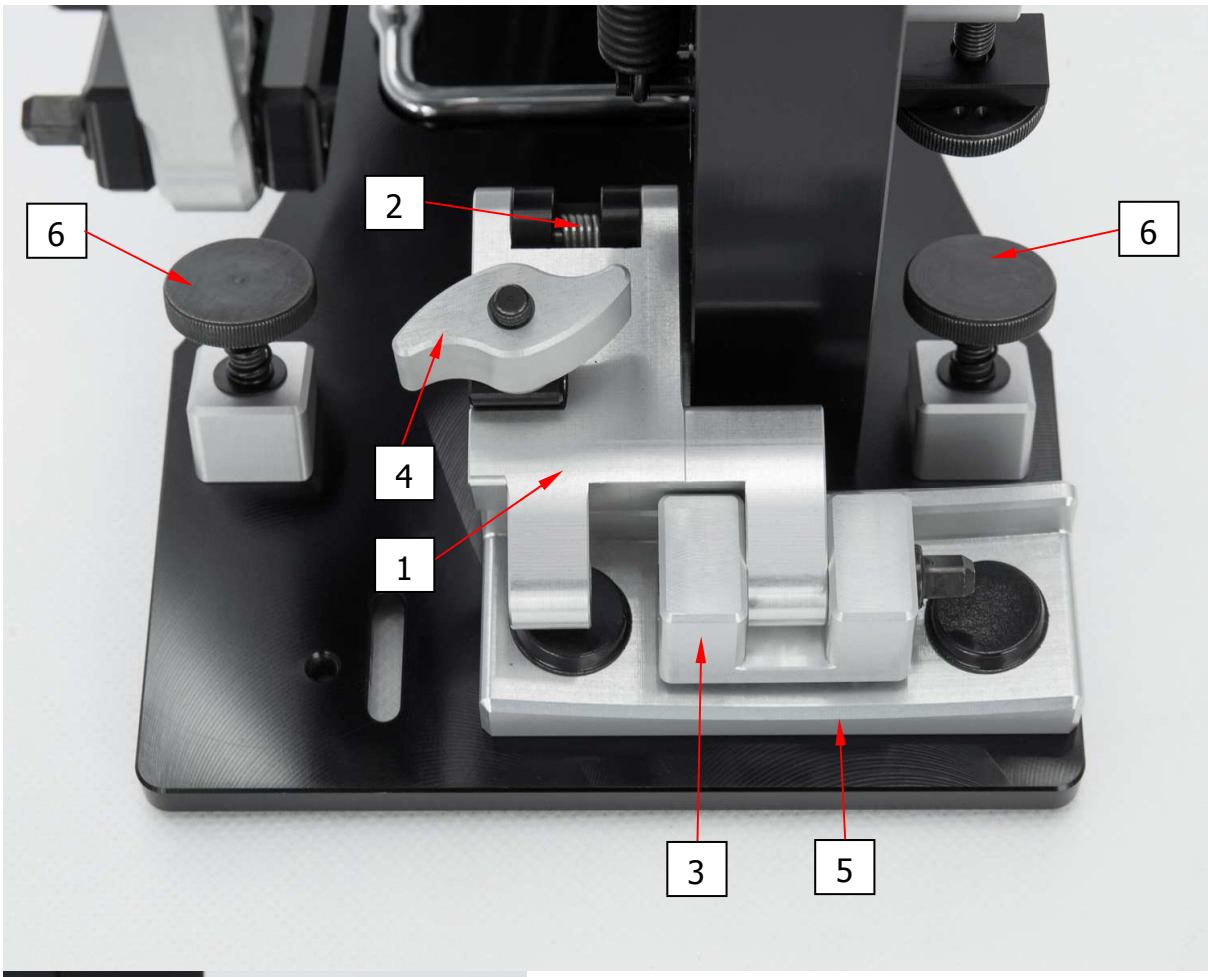

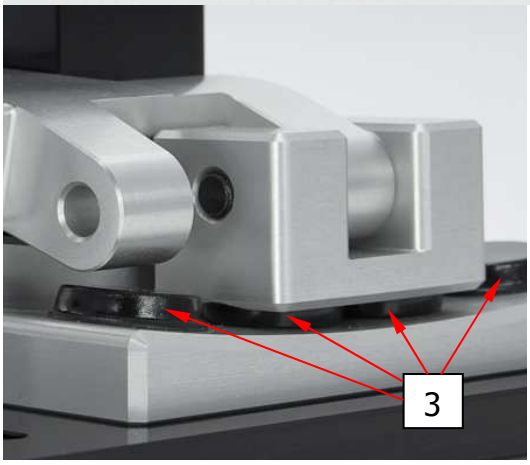

Picture 5.1.1 Clamping device

5.2 Fixing the double bass drum pedal - DOUBLE

To keep the symmetric spacing of beaters against the bass drum axis, tighten the central clamp (1) in tightening arm and place the central base (2) in position as on Picture 5.2.1. Central clamp position is changed by unscrewing the screw (3). Central base position is changed by shifting the ball-shaped Allen screws in slotted holes made in the base – Picture 5.2.2 (from the bottom, only the Allen screws (4) fixing the central base should be unscrewed).

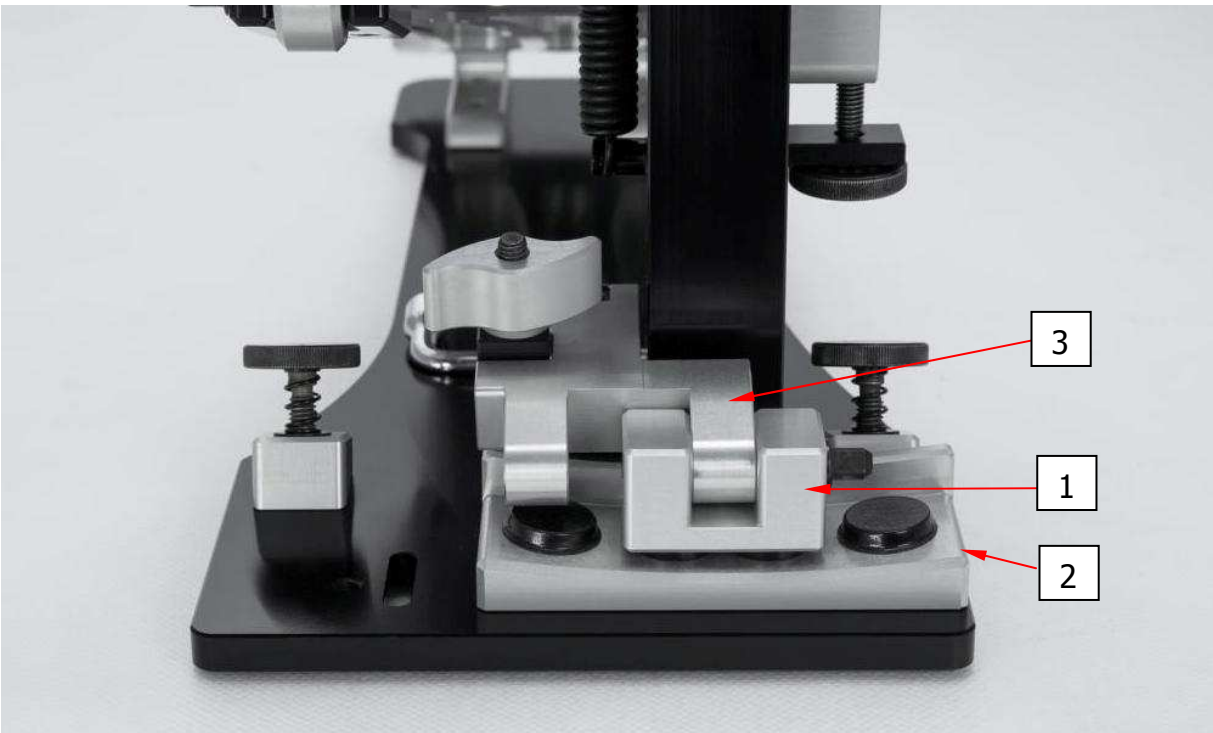

Fot.5.2.1 Clamping device - configuration DOUBLE

Fot.5.2.2 Clamping device - configuration DOUBLE – screw spacing – bottom view

5.3 Fixing the single drum pedal – 2xSINGLE and SINGLE

If you want the single drum pedal beater to hit the centre of the central, you have to configure the clamping arm and the central base as shown on Picture 5.3.1. If id doesn't matter for you, you can leave the drum pedal in Twin configuration – p. 5.2, but beater will be hitting the central 35 mm from the axis.

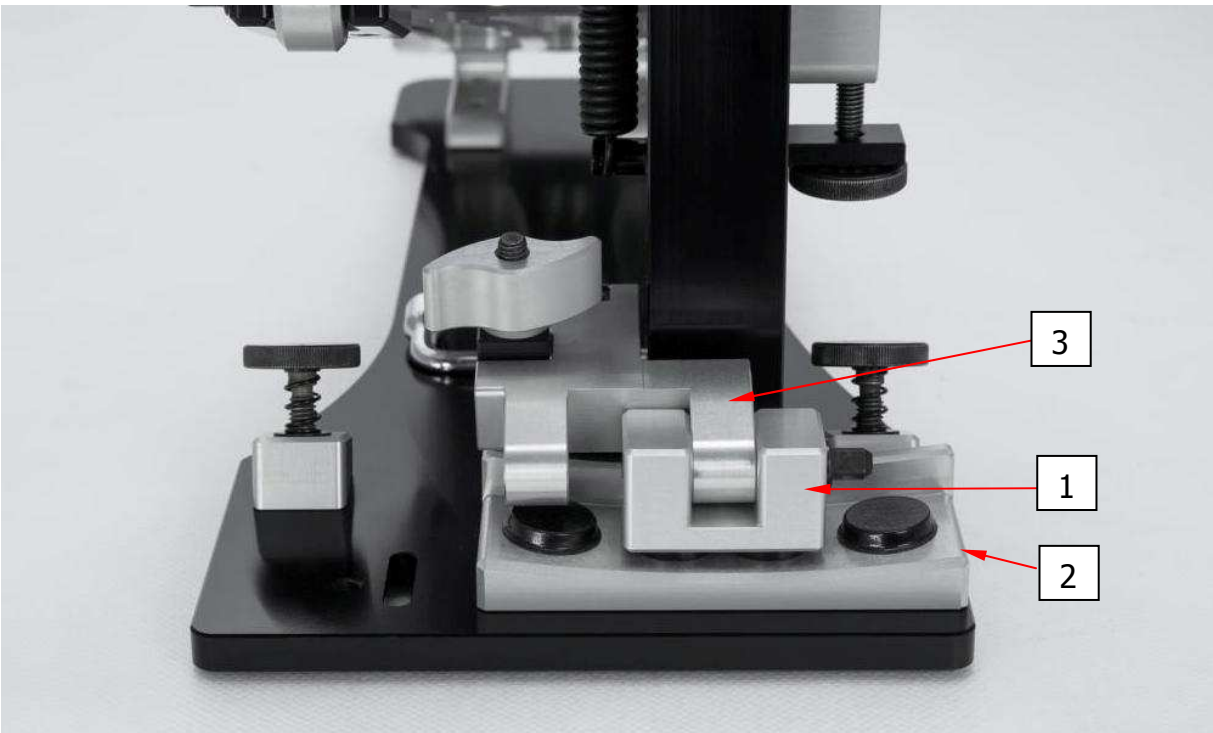

Fot.5.2.1 Clamping device - configuration 2xSINGLE and SINGLE

Fot.5.3.2 Clamping device - configuration 2xSINGLE and SINGLE - screw spacing – bottom view

5.4 Adjustment of the distance between the pedal and bass drum

Clamping device and central base can be moved. It enables to change the distance between the pedal and bass drum. To change this distance, with the help of 3mm Allen wrench, loosen the 5 screws (1) fixing both elements to the base – picture 5.4.1, move it to suitable positions and tighten the screws again.

Picture 5.4.1 Drum pedal – view from the bottom – screws to be loosened are marked

6. Conversion DOUBLE to 2xSINGLE

If you want to replace DOUBLE to 2xSINGLE pedals, all you need to do is to unscrew the left beater from the main drum pedal and mount it on the auxiliary one. Next you have to dismantle the connector – that's all.

Fot. 6.1 Stopa Czarcie Kopyto - widok wersji DOUBLE zmienionej do wersji 2xSINGLE

7. Certificate

Every purchaser is provided with certificate of originality with the name of the owner and serial numbers of drum pedals.

Picture of this kind of certificate is given below.

Picture 7.1 Certificate

9. Case

Drum pedals are supplied in professional case with Czarcie Kopyto logo engraved on the cover.

Fot.8.1 Case

Fot.8.2 Czarcie Kopyto inside the case

Delivery includes

- pedals
- pedals dedicated case
- self adhesive velcro
- Czarcie Kopyto lanyard with a steel tuning key
- Czarcie Kopyto T-Shirt
- 3 allen wrenches
- Key for replaceable plastic pads (beater's pads)
- 2 spare springs
- Certificate

9. Contact

How to place an order

If you want to order the pedals, you should fill in the purchase order form which you can download from our website www.czarciekopyto.com

Thank you for your interest in our company and Czarcie Kopyto drum pedal

If you have any questions about the Czarcie Kopyto drum pedal, please contact us at:
kontakt@czarciekopyto.com